2.0-3.2 T

T Series Cushion Tire Electric Forklift

◎整车采用短轴距设计，整车长度缩小，转弯半径更小，灵活满足空间受限区域作业需求。

The vehicle adopts a short wheelbase design, reducing the overall length and minimizing the turning radius, which flexibly meets the operation requirements in space-limited areas.

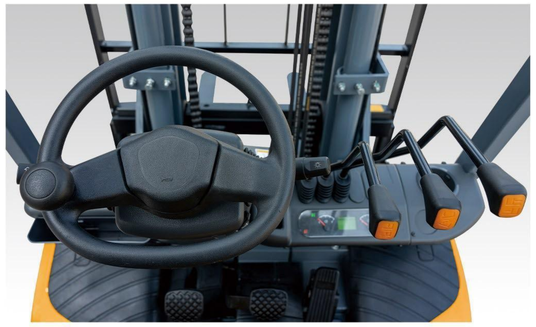

◎PES 三档位模式，可根据工况自由选择不同速度，作业效率更高。可选配弯道减速功能，降低机器侧倾风险。

PES three gear mode. Customers can select different mode based on their working condition. Optional steering speed control function helps to reduce the risk of machine rolling.

◎倾斜油缸置于底板下，使底板面积增加 45%，脚部操作空间加大。

The tilting cylinder is placed under the baseboard, increasing the operation area by 45%.

◎锂电池使用寿命长。零污染免维护，1.5-2 小时即可快速充满，随用随充，更适合多班次场景作业。

The lithium battery is zero-pollution and maintenance free,capable of fast charging in just 1.5–2 hours, it is ideal for multi-shift operations.

◎智能充电机自动检测电池状态，然后自动调整充电电流和电压，具有亏电保护，温度过高保护及充满自停功能，延长电池保护寿命。

The intelligent charger automatically detects battery parameters, then adjusts the charging current and voltage accordingly. It features low-charge protection, over-temperature protection, and an auto-stop function when fully charged, effectively extending the battery's lifespan.

◎采用永磁电机 + 电控 + 变速箱一体集成式动力系统，IP67 防护等级，适用于室内室外全工况作业。

It adopts an integrated power system of permanent magnet motor, electronic control and gearbox, with an IP67 protection level, suitable for all-weather operations both indoors and outdoors.

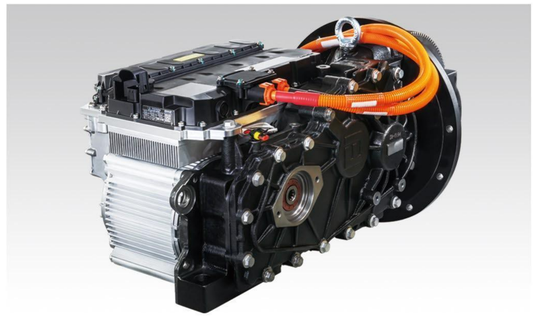

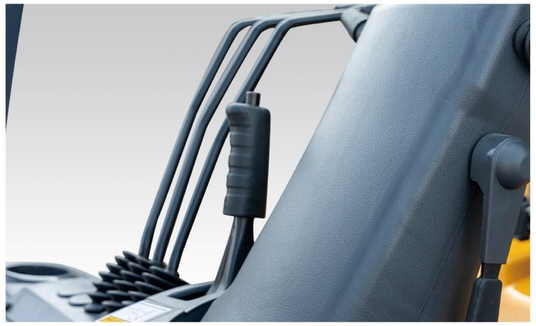

◎右置手刹人体工程学设计，提升操控便利性，释放左侧上下车空间，便于操控通行。

Ergonomic right-hand parking brake improves handling convenience, maximizes left-side access space, and facilitates easier operation and passage.

◎配备铸造转向桥，结构紧凑，受载变形小，防尘防水，提高整机使用寿命和可靠性。

Equipped with casting steering axle. The compact structure, small deflection under load, and dust-proof and water-proof design endow the forklift with long service life and working reliability.

◎压配式实心胎采用高模量橡胶，橡胶与钢圈粘合强力，具有很低的滚动阻力和高耐磨性，免维护，降低成本。轮胎尺寸更小，车辆重心低，作业更稳定安全。

Cushion tires are made of high modulus rubber, which is featured with strong adhesion between rubber and steel ring, low rolling resistance and high wear resistance, maintenance-free and cost effective. Smaller tire size and lower center of gravity, makes it more stable and safer for operation.

◎配备半包围座椅，司机驾驶更舒适。

The forklift is equipped with a semi-enclosed seat, providing greater comfort for the driver.

◎加强型护顶架采用大圆弧支腿，拓宽操作空间、优化视野；搭配新材料雨棚遮阳挡雨，驾驶更舒适。

The reinforced overhead guard with large curved support legs expands operating space and improves visibility;the advanced material canopy enhances driver comfort.

◎媲美燃油车，稳定性高。系统转换效率高达 90% 以上。

It rivals fuel vehicles in terms of stability, with a system conversion efficiency of over 90%.

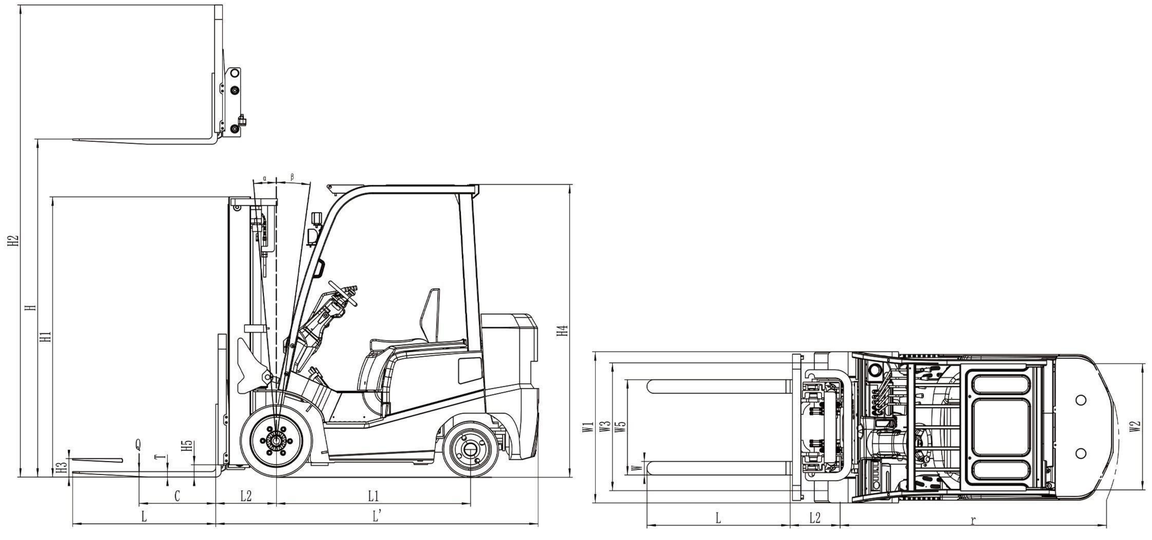

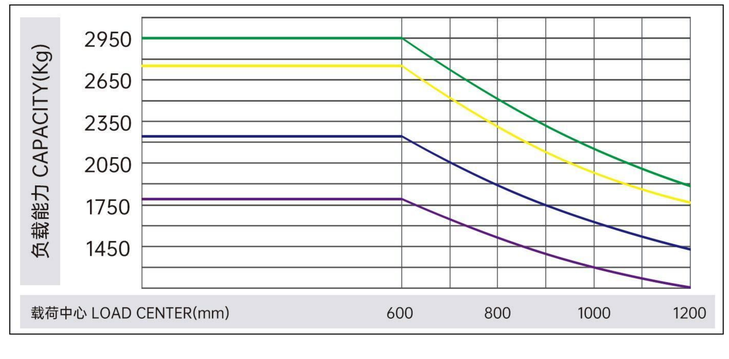

TECHNICAL DATAS

	General						
1.01	Model			CPD20TC	CPD25TC	CPD30TC	CPD32TC
1.02	Rated capacity	Q	Kg	1800	2250	2750	2950
1.03	Load center distance	C	mm	600	600	600	600
1.04	Power type			Lithium Battery	Lithium Battery	Lithium Battery	Lithium Battery
1.05	Driving type			Seated	Seated	Seated	Seated
1.06	Wheel base	L1	mm	1465	1465	1465	1465
	Tyres						
2.01	Tyre type			Cushion tires	Cushion tires	Cushion tires	Cushion tires
2.02	Wheel number (front/rear)			2/2	2/2	2/2	2/2
2.03	Front tread	W3	mm	892	892	917	917
2.04	Rear tread	W2	mm	920	920	920	920
2.05	Tyre (front)			21x7-15	21x7-15	21x8-15	21x8-15
2.06	Tyre (rear)			16x6-10.5	16x6-10.5	16x6-10.5	16x6-10.5
	Size						
3.01	Front overhang	L2	mm	450	450	460	460
3.02	Mast tilting angle, front/rear	α/β	°	6/8	6/8	6/8	6/8
3.03	Height with mast retraction	H1	mm	2035	2035	2090	2090
3.04	Free lifting height	H3	mm	110	110	110	110
3.05	Max. lifting height	H	mm	3000	3000	3000	3000
3.06	Max. height after lifting	H2	mm	4030	4030	4240	4240
3.07	Overhead guard height	H4	mm	2140	2140	2140	2140
3.08	Fork size: length x width x thickness	L x W x T	mm	920 x 100 x 40	1070 x 120 x 40	1070 x 125 x 45	1070 x 125 x 45
3.09	Overall length (fork excluded)	L'	mm	2345	2375	2480	2480
3.10	Overall width	W1	mm	1070	1070	1120	1120
3.11	Turning radius	r	mm	2000	2000	2100	2100
3.12	Ground clearance of mast	H5	mm	90	90	90	90
3.13	Ground clearance of wheel base center (loaded)	H6	mm	110	110	110	110
3.14	Lateral fork adjustment Max./Min.	W5	mm	1024/200	1024/240	1024/250	1024/250
	Performance						
4.01	Travelling speed (loaded/unloaded)		km/h	18/18	18/18	18/18	18/18
4.02	Lifting speed (loaded/unloaded)		mm/s	320/450	320/400	320/450	300/400
4.03	Lowering speed		mm/s	550	550	500	500
4.04	Gradeability (loaded)		%	18	18	15	15
	Weight						
5.01	Total weight (with battery)		Kg	3480	3900	4400	4550
	Lithium Battery						
6.01	Lithium Battery voltage /capacity		V/Ah	80/230	80/230	80/280	80/280
6.02	Lithium Battery weight		Kg	224	224	252	252
	Motor and controller						
7.01	Driving motor power(S9)		Kw	15			
7.02	Lifting motor power(S9)		Kw	13			
7.03	Electronic controller			Advanced electrionic control			
7.04	Charger		V/Ah	80/100			
7.05	Service brake/parking brake			Hydraulic/Mechanical			
7.06	Hydraulic system working pressure		Mpa	18.5			

WIDE VIEW MAST

Mast model	Max.lifting height (mm)	Load capacity (kg) (load center 600mm)				Mast overall height (mm)		Mast tilting angle° (front/rear)
		2.0t	2.5t	3.0t	3.2t	2.0-2.5t	3.0-3.2t	2.0-3.2t
M270	2700	1800	2250	2750	2950	1885	1940	6-8°
M300	3000	1800	2250	2750	2950	2035	2090	6-8°
M330	3300	1800	2250	2750	2950	2185	2240	6-8°
M350	3500	1800	2250	2750	2950	2285	2340	6-8°
M370	3700	1800	2250	2750	2950	2385	2440	6-8°
M400	4000	1800	2250	2750	2950	2585	2640	6-6°
M425	4250	1800	2250	2750	2950	2710	2765	6-6°
M450	4500	1750	2200	2700	2900	2835	2890	6-6°
M500	5000	1700	2000	2450	2700	3085	3140	6-6°
M550	5500	1550	1850	2300	2450	3385	3440	3-6°
M600	6000	1200	1450	1600	1700	3635	3690	3-6°

WIDE VIEW FULL FREE 2-STAGE MAST

Mast model	Max.lifting height (mm)	Load capacity (kg) (load center 600mm)				Mast overall height (mm)		Free lifting height (with backrest)		Mast tilting angle° (front/rear)
		2.0t	2.5t	3.0t	3.2t	2.0-2.5t	3.0-3.2t	2.0-2.5t	3.0-3.2t	2.0-3.2t
ZM270	2700	1800	2250	2750	2950	1885	1965	865	725	6-8°
ZM300	3000	1800	2250	2750	2950	2035	2115	1015	875	6-8°
ZM330	3300	1800	2250	2750	2950	2185	2265	1165	1025	6-8°
ZM350	3500	1800	2250	2750	2950	2285	2365	1265	1125	6-8°
ZM370	3700	1800	2250	2750	2950	2385	2465	1365	1225	6-8°
ZM400	4000	1800	2250	2750	2950	2585	2665	1565	1425	6-6°

WIDE VIEW FULL FREE 3-STAGE MAST

Mast model	Max.lifting height (mm)	Load capacity (kg) (load center 600mm)				Mast overall height (mm)		Free lifting height (with backrest)		Mast tilting angle° (front/rear)
		2.0t	2.5t	3.0t	3.2t	2.0-2.5t	3.0-3.2t	2.0-2.5t	3.0-3.2t	2.0-3.2t
ZSM360	3600	1800	2250	2750	2950	1790	1880	780	640	6-6°
ZSM400	4000	1800	2250	2750	2950	1923	2013	915	775	6-6°
ZSM435	4350	1800	2250	2750	2950	2040	2130	1030	890	6-6°
ZSM450	4500	1750	2200	2750	2950	2090	2180	1080	940	6-6°
ZSM480	4800	1650	2100	2650	2850	2190	2280	1180	1040	6-6°
ZSM500	5000	1550	2000	2550	2750	2257	2347	1250	1110	6-6°
ZSM550	5500	1400	1750	2400	2600	2423	2513	1415	1275	3-6°
ZSM600	6000	1200	1300	1650	1900	2640	2730	1630	1490	3-6°

(1)Free Lift without backrest: 2-2.5T:+435mm,3-3.2T:+580mm