1.5-3.5 T

E Series 1.5-3.5T Lithium Battery Forklift

◎机罩超大开合角度，大大提高维修保养时的可视范围，为维修人员提供更开阔的视野，提升作业效率。

The engine hood features an extra-wide opening angle, significantly improving visibility during maintenance and providing a broader view for technicians, thereby enhancing operational efficiency.

◎PES 三档位模式，可根据工况自由选择不同速度，作业效率更高。可选配弯道减速功能，降低机器侧倾风险。

PES three gear mode. Customers can select different mode based on their working condition. Optional steering speed control function helps to reduce the risk of machine tilting.

◎锂电池使用寿命长。零污染免维护，1.5-2 小时即可快速充满，随用随充，更适合多班次场景作业。

The lithium battery is zero-pollution and maintenance free. It is capable of fast charging in just 1.5-2 hours, ideal for multi-shift operations.

◎智能充电机自动检测电池状态，然后自动调整充电电流和电压，具有亏电保护，温度过高保护及充满自停功能，延长电池保护寿命。

The intelligent charger automatically detects battery parameters, then adjusts the charging current and voltage accordingly. It features low-charge protection, over-temperature protection, and an auto-stop function when fully charged, effectively extending the battery's lifespan.

◎采用永磁电机 + 电控 + 变速箱一体集成式动力系统，IP67 防护等级，适用于室内室外全工况作业。

It adopts an integrated power system of permanent magnet motor, electronic control and gearbox, with an IP67 protection level, suitable for all-weather operations both indoors and outdoors.

◎匹配铸造转向桥，承载更高，耐磨性好。大转向角度，确保整车极小的转弯半径。

The cast steering axle provides higher load capacity and excellent wear resistance. The large steering angle ensures an extremely small turning radius for the vehicle.

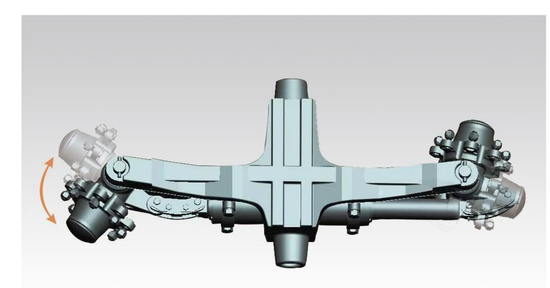

◎4.3 英寸高清数字仪表盘显示速度、电量、里程和故障代码等关键信息。

The 4.3-inch high-definition digital dashboard displays key information such as speed, battery level, mileage and fault codes.

◎采用 OPS 减震座椅，驾驶更舒适。

Equipped with OPS suspension seat for a more comfortable driving experience.

◎配置 LED 节能灯具，亮度高，能耗低，寿命长。

The LED energy-saving lights offers high brightness, low energy consumption and a long lifespan.

◎大圆弧护顶架联合纵向栅板，极大提升驾驶员上方视野开阔度，便于安全、精准地观察高处货物情况。

The large arc overhead guard combined with vertical grilles significantly enhances the upward visibility for the operator, making it easier and safer to observe goods at height with precision.

◎基于人机工程学设计的叉车宽扶手，凭借优化的握持区域与贴合手部轮廓的弧度，极大提升操作舒适度。

The forklift' s wide armrest, ergonomically designed with an optimized grip area and contour that fits the shape of the hand, greatly enhances operating comfort.

TECHNICAL DATAS

	General								
1.01	Model			CPD15E	CPD18E	CPD20E	CPD25E	CPD30E	CPD35E
1.02	Rated capacity	Q	Kg	1500	1800	2000	2500	3000	3500
1.03	Load center distance	C	mm	500		500		500	
1.04	Power type			Lithium Battery		Lithium Battery		Lithium Battery	
1.05	Driving type			Seated		Seated		Seated	
1.06	Wheel base	L1	mm	1400		1480		1570	
	Tyres								
2.01	Tyre type			Pneumatic		Pneumatic		Pneumatic	
2.02	Wheel number (front/rear)			2×/2		2×/2		2X / 2	
2.03	Front tread	W3	mm	912		970		1000	
2.04	Rear tread	W2	mm	920		950		970	
2.05	Tyre (front)			6.50-10-12PR		7.00-12-12PR		28X9-15-12PR	
2.06	Tyre (rear)			5.00-8-8PR		18X7-8-14PR		18X7-8-14PR	200/50-10-14PR
	Size								
3.01	Front overhang	L2	mm	400		458		475	
3.02	Mast tilting angle, front/rear	α/β	°	6/8		6/12		6/12	
3.03	Height with mast retraction	H1	mm	1990		1995		2025	
3.04	Free lifting height	H3	mm	140		150		150	
3.05	Max. lifting height	H	mm	3000		3000		3000	
3.06	Max. height after lifting	H2	mm	4025		4045		4160	
3.07	Overall guard height	H4	mm	2140		2098		2092	
3.08	Fork size: length×width×thickness	L x W x T	mm	1070×100×35	1070×100×40	1070×100×40	1070×120×40	1070×122×45	1070×122×50
3.09	Overall length(fork excluded)	L'	mm	2035		2353		2507	2590
3.10	Overall width	W1	mm	1090		1170		1220	
3.11	Turning radius	r	mm	1997		2172		2360	2443
3.12	Ground clearance of mast	H5	mm	105		110		120	
3.13	Ground clearance of wheel base center (loaded)	H6	mm	115		105		130	
3.14	Lateral fork adjustment Max./Min.	W5	mm	970/200		1038/200	1038/240	1100/250	1100/250
	Performance								
4.01	Travelling speed (loaded/unloaded)		km/h	15/15		18/18		18/18	
4.02	Lifting speed (loaded/unloaded)		mm/s	280/400	260/400	320/450	300/400	320/450	300/400
4.03	Lowering speed		mm/s	< 600					
4.04	Gradeability (loaded)		%	18					
	Weight								
5.01	Total weight (with battery)		Kg	2860	3040	3620	3960	4500	4940
	Lithium Battery								
6.01	Lithium Battery voltage /capacity		V/Ah	76.8/173	76.8/173	80/230	80/230	80/280	80/280
6.02	Lithium Battery weight		Kg	150	150	183	183	282	282
	Motor and controller								
7.01	Driving motor power(S9)		Kw	13		15		15	
7.02	Lifting motor power(S9)		Kw	13					
7.03	Electronic controller			Advanced electrionic control					
7.04	Charger		V/A	80/100					
7.05	Service brake/parking brake			Hydraulic / Mechanical					
7.06	Hydraulic system working pressure		Mpa	18.5					

WIDE VIEW MAST

Mast model	Max.lifting height (mm)	Load capacity (kg) (load center 500mm)						Mast overall height (mm)				Mast tilting angle° (front/rear)		
		1.5T	1.8T	2t	2.5t	3.0t	3.5t	1.5-1.8T	2-2.5t	3.0t	3.5t	1.5-1.8T	2-2.5t	3.0-3.5t
M300	3000	1500	1800	2000	2500	3000	3500	1990	1995	2065	2065	6/8	6/12	6/12
M350	3500	1500	1600	2000	2500	3000	3500	2240	2245	2315	2315	6/8	6/12	6/12
M400	4000	1500	1600	2000	2500	3000	3300 *3500	2540	2545	2615	2615	6/6 *6/8	6-6 *6-6	6-6 *6-12
M450	4500	*1300	*1400	1600 *1900	2100 *2400	2600 *3000	2900 *3100	2790	2795	2865	2865	6/6 *6/8	6-6 *6-6	6-6 *6-12
M500	5000	*1200	*1300	1200 *1700	1600 *1900	2100 *2850	2400 *2750	3040	3045	3115	3115	6/6 *6/6	6-6 *6-6	6-6 *6-6
M550	5500	*1100	*1200	950 *1500	1200 *1700	1650 *2400	1800 *2500	3340	3345	3415	3415	*3/6	*3-6	*3-6
M600	6000	*650	*800	800 *1200	900 *1400	1200 *2100	1400 *2300	3590	3595	3665	3665	*3/6	*3-6	*3-6

WIDE VIEW FULL FREE 2-STAGE MAST

Mast model	Max.lifting height (mm)	Load capacity (kg) (load center 500mm)						Mast overall height (mm)				Free lifting height (with backrest)				Mast tilting angle° (front/rear)		
		1.5T	1.8T	2t	2.5t	3.0t	3.5t	1.5-1.8T	2-2.5t	3.0t	3.5t	1.5-1.8T	2-2.5t	3.0t	3.5t	1.5-1.8T	2-2.5t	3.0-3.5t
ZM300	3000	1500	1800	2000	2500	3000	3500	1990	1995	2065	2065	975	995	825	825	6/8	6/12	6/12
ZM330	3300	1500	1800	2000	2500	3000	3500	2140	2145	2215	2215	1125	1145	975	975	6/8	6/12	6/12
ZM350	3500	1500	1700	2000	2500	3000	3500	2240	2245	2315	2315	1225	1245	1075	1075	6/8	6-6 *6-12	6/12
ZM370	3700	1500	1700	2000	2500	/	/	2340	2345	/	/	1250	1370	/	/	6/8	6-6 *6-12	/
ZM400	4000	1500	1600	2000	2500	2700 *3000	3300 *3500	2540	2545	2615	2615	1525	1545	1375	1375	6/8	6-6 *6-12	6-6 *6-12
ZM450	4500	/	/	1800 *1900	2150 *2400	2400 *2700	2900 *3100	/	2795	2865	2865	/	1795	1625	1625	/	6-6 *6-6	6-6 *6-12
ZM500	5000	/	/	1600 *1700	1650 *2200	2000 *2400	2400 *2750	/	3045	3115	3115	/	2045	1875	1875	/	*3-6	6-6 *6-6

WIDE VIEW FULL FREE 3-STAGE MAST

Mast model	Max.lifting height (mm)	Load capacity (kg) (load center 500mm)						Mast overall height (mm)				Free lifting height (with backrest)				Mast tilting angle° (front/rear)		
		1.5T	1.8T	2t	2.5t	3.0t	3.5t	1.5-1.8T	2-2.5t	3.0t	3.5t	1.5-1.8T	2-2.5t	3.0t	3.5t	1.5-1.8T	2-2.5t	3.0-3.5t
ZSM360	3600	1500	1700	2000	2500	3000	3200	1690	1755	1820	1820	676	655	588	588	6/6	6-6 *6-6	6-6 *6-6
ZSM400	4000	1300	1600	2000	2500	3000	3200	1825	1888	1953	1953	810	778	721	721	6/6	6-6 *6-6	6-6 *6-6
ZSM450	4500	1150	1400	1600 *1800	1700 *2200	2500 *2700	2800 *3000	1990	2055	2120	2120	976	995	888	888	6/6	6-6 *6-6	6-6 *6-6
ZSM480	4800	1100	1300	1250 *1700	1500 *2000	2250 *2450	2500 *2750	2090	2155	2220	2220	1076	1055	988	988	6/6	6-6 *6-6	6-6 *6-6
ZSM500	5000	1000	1200	1100 *1600	1300 *1800	2100 *2300	2300 *2600	2155	2222	2287	2287	1145	1121	1055	1055	6/6	6-6 *6-6	6-6 *6-6
ZSM550	5500	900	950	850 *1300	1100 *1600	1600 *2100	1700 *2300	2380	2388	2453	2453	1360	1288	1221	1221	3/6	3-6 *3-6	3-6 *3-6
ZSM600	6000	600	650	700 *1100	800 *1300	1200 *1900	1300 *2100	2550	2605	2670	2670	1526	1505	1438	1438	3/6	3-6 *3-6	3-6 *3-6
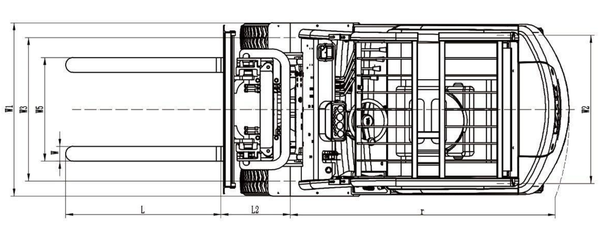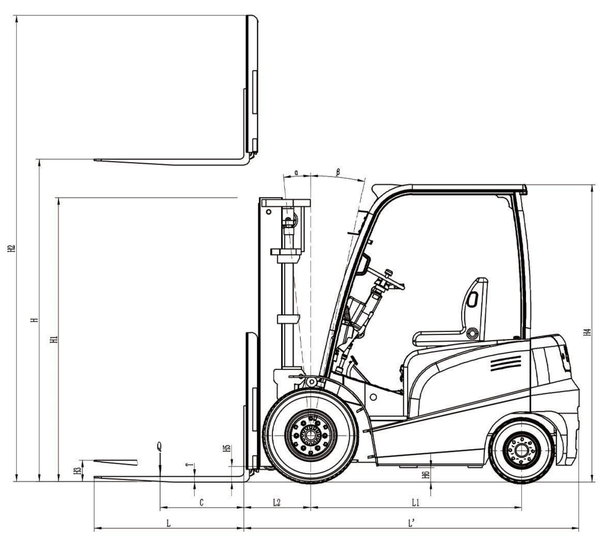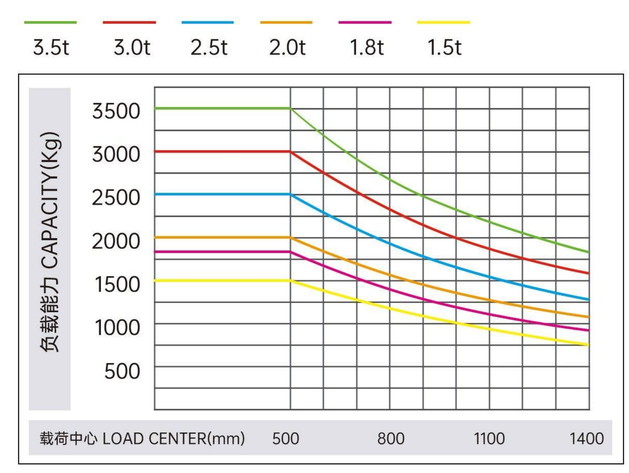
(1)Free lifting height (without backrest) 1.5-1.8T: +514mm,2-2.5T:+435mm,3-3.5T:+580mm;
(2)The service weight is the weight of forklift with dual tyres: +110 kg;
(3)*Refers to the load capacity of forklift with dual tyres;