1.5-3.8t

EK Series Lithium Battery Forklift

•采用永磁电机+电控+变速箱一体集成式动力系统，IP67防护等级，适用于室内室外全工况作业。
It adopts an integrated power system of permanent magnet motor, electronic control and gearbox, with an IP67 protection level, suitable for all-weather operations both indoors and outdoors.

•媲美燃油车，稳定性高。系统转换效率高达90%以上。
It rivals fuel vehicles in terms of stability, with a system conversion efficiency of over 90%.

•4.3英寸高清数字仪表盘显示速度、电量、里程和故障代码等关键信息。

The 4.3-Inch High-Definition LCD Dashboard displays essential information such as speed, battery level, mileage and fault codes.

•PES 三档位模式，可根据工况自由选择不同速度，作业效率更高。
可选配弯道减速功能，降低机器侧倾风险。

PES three gear mode. Customers can select different mode based on their working condition. Optional steering speed control function helps to reduce the risk of machine rolling.

•锂电池使用寿命长。零污染免维护，1.5-2小时即可快速充满，
随用随充，更适合多班次场景作业。

The lithium battery is zero-pollution and maintenance free, capable of fast charging in just 1.5–2 hours, it is ideal for multi-shift operations.

•智能充电机自动检测电池状态，然后自动调整充电电流和电压，
具有亏电保护，温度过高保护及充满自停功能，延长电池保护寿命。

The intelligent charger automatically detects battery parameters, then adjusts the charging current and voltage accordingly. It features low-charge protection, over-temperature protection, and an auto-stop function when fully charged, effectively extending the battery's lifespan.

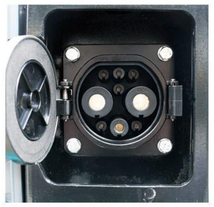

•匹配铸造转向桥，承载更高，耐磨性好。大转向角度，
确保整车极小的转弯半径。

The cast steering axle provides higher load capacity and excellent wear resistance. The large steering angle ensures an extremely small turning radius for the vehicle.

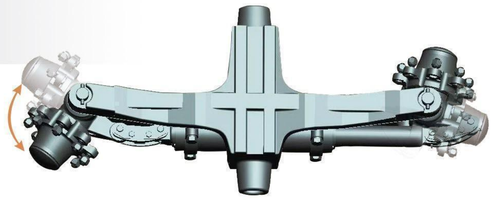

•货叉升降及前后倾作业时，油缸缓冲功能为机手
提供更安全的保护。

During forklift lifting and tilting operations, the cylinder's buffering function provides enhanced safety protection for the operator.

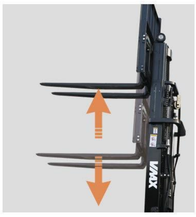

•采用内燃叉车门架、车体，承载能力更强,稳定性、安全性更高。

Internal combustion forklift mast and body offer stronger load-bearing capacity, enhanced stability, and higher safety.

•采用OPS减震座椅，驾驶更舒适。

Equipped with OPS shock-absorbing seats for a more comfortable driving experience.

•仪表台USB电源设置，手机充电更便捷。

Dashboard USB power outlet offers convenient mobile phone charging.

•无尾气、无酸雾、低噪音，工作舒适度更高。

No exhaust fumes, no acid mists, low noise, and higher working comfort.

•电池免维护，无发动机保养费，低成本，强性能，更环保。

With maintenance-free lithium battery, it is low-cost, high-performance and more environmentally friendly.

TECHNICAL DATAS

	General									
1.01	Model			CPD15EK	CPD18EK	CPD20EK	CPD25EK	CPD30EK	CPD35EK	CPD38EK
1.02	Rated capacity	Q	Kg	1500	1800	2000	2500	3000	3500	3800
1.03	Load center distance	C	mm	500		500		500		
1.04	Power type			Lithium Battery		Lithium Battery		Lithium Battery		
1.05	Driving type			Seated		Seated		Seated		
1.06	Wheel base	L1	mm	1400		1600		1760		
	Tyres									
2.01	Tyre type			Pneumatic		Pneumatic		Pneumatic		
2.02	Wheel number (front/rear)			2×/2		2×/2		2×/2		
2.03	Front tread	W3	mm	890		970		1000		
2.04	Rear tread	W2	mm	920		970		970		
2.05	Tyre (front)			6.50-10-10PR		7.00-12-12PR		28X9-15-12PR		
2.06	Tyre (rear)			5.00-8-10PR		6.00-9-10PR		6.50-10-10PR		
	Size									
3.01	Front overhang	L2	mm	420		469		469	487	489
3.02	Mast tilting angle, front/rear	α/β	°	6/12		6/12		6/12		
3.03	Height with mast retraction	H1	mm	1990		2000		2065	2120	2120
3.04	Free lifting height	H3	mm	125		150		150		
3.05	Max. lifting height	H	mm	3000		3000		3000		
3.06	Max. height after lifting	H2	mm	4030		4042		4250		
3.07	Overall guard height	H4	mm	2070		2070		2090		
3.08	Fork size: length×width×thickness	L x W x T	mm	1070×100×35	1070×100×40	1070×100×40	1070×120×40	1070×125×45	1070×125×50	1070×125×50
3.09	Overall length(fork excluded)	L'	mm	2230		2580		2715	2720	2750
3.10	Overall width	W1	mm	1080		1160		1225		
3.11	Turning radius	r	mm	2060		2330		2440	2440	2470
3.12	Ground clearance of mast	H5	mm	105		110		120		
3.13	Ground clearance of wheel base center (loaded)	H6	mm	115		135		143		
3.14	Lateral fork adjustment Max./Min.	W5	mm	910/200		1024/200	1024/240	1060/250		
	Performance									
4.01	Travelling speed (loaded/unloaded)		km/h	15/15		15/15		15/15		
4.02	Lifting speed (loaded/unloaded)		mm/s	280/400	260/400	320/450	300/400	320/450	300/400	300/400
4.03	Lowering speed		mm/s	< 600		< 600		< 600		
4.04	Gradeability (loaded)		%	18		15		15		
	Weight									
5.01	Total weight (with battery)		Kg	2680	2820	3360	3610	4125	4470	4700
	Lithium Battery									
6.01	Lithium Battery voltage /capacity		V/Ah	76.8/173		80/230		80/280		
6.02	Lithium Battery weight		Kg	154		224		252		
	Motor and controller									
7.01	Driving motor power(S9)		Kw	13						
7.02	Lifting motor power(S9)		Kw	13						
7.03	Electronic controller			Advanced electrionic control						
7.04	Charger		V/Ah	80/100						
7.05	Service brake/parking brake			Hydraulic / Mechanical						
7.06	Hydraulic system working pressure		Mpa	18.5						

WIDE VIEW MAST

Mast model	Max.lifting height (mm)	Load capacity (kg) (load center 500mm)							Mast overall height (mm)					Mast tilting angle° (front/rear)		
		1.5t	1.8t	2t	2.5t	3t	3.5t	3.8t	1.5-1.8t	2-2.5t	3t	3.5t	3.8t	1.5-1.8t	2-2.5t	3-3.8t
M300	3000	1500	1800	2000	2500	3000	3500	3800	1990	1995	2065	2120	2120	6/12	6/12	6/12
M330	3300	1500	1800	2000	2500	3000	3500	3800	2140	2145	2215	2270	2270	6/12	6/12	6/12
M350	3500	1500	1800	2000	2500	3000	3500	3800	2240	2245	2315	2370	2370	6/12	6/12	6/12
M370	3700	1500	1800	2000	2500	3000	3500	3800	2340	2345	2415	2470	2470	6-6 *6-12	6-6 *6-6	6-6 *6-12
M400	4000	1500	1800	2000	2500	3000	3300 *3500	3500 *3800	2540	2545	2615	2670	2670	6-6 *6-12	6-6 *6-6	6-6 *6-12
M450	4500	1200 *1400	1500 *1700	1600 *1900	2100 *2400	2600 *3000	2900 *3100	3100 *3300	2790	2795	2865	2920	2920	6-6 *6-6	6-6 *6-6	6-6 *6-12
M500	5000	900 *1150	1000 *1300	1200 *1700	1600 *1900	2100 *2850	2400 *2750	2650 *2800	3040	3045	3115	3170	3170	6-6 *6-6	6-6 *6-6	6-6 *6-6
M550	5500	*1000	*1100	950 *1500	1200 *1700	1650 *2400	1800 *2500	1900 *2600	3340	3345	3415	3470	3470	*3-6	*3-6	*3-6
M600	6000	*750	*900	700 *1200	900 *1400	1200 *2100	1400 *2300	1500 *2400	3590	3595	3665	3720	3720	*3-6	*3-6	*3-6

WIDE VIEW FULL FREE 2-STAGE MAST

Mast model	Max.lifting height (mm)	Load capacity (kg) (load center 500mm)							Mast overall height (mm)				Free lifting height (with backrest)				Mast tilting angle° (front/rear)		
		1.5t	1.8t	2t	2.5t	3t	3.5t	3.8t	1.5-1.8t	2-2.5t	3t	3.5-3.8t	1.5-1.8t	2-2.5t	3t	3.5-3.8t	1.5-1.8t	2-2.5t	3-3.8t
ZM300	3000	1500	1800	2000	2500	3000	3500	3800	1990	1995	2065	2095	975	995	825	870	6/12	6/12	6/12
ZM350	3500	1500	1800	2000	2500	3000	3500	3800	2240	2245	2315	2345	1225	1245	1075	1120	6/12	6-6 *6-12	6/12
ZM400	4000	1500	1800	2000	2500	2700 *3000	3300 *3500	3500 *3800	2540	2545	2615	2645	1525	1545	1375	1420	6-6 *6-12	6-6 *6-12	6-6 *6-12
ZM450	4500	1100 *1300	1450 *1600	1800 *1900	2150 *2400	2400 *2700	2900 *3100	3100 *3300	2790	2795	2865	2895	1775	1795	1625	1670	6-6 *6-6	6-6 *6-6	6-6 *6-12
ZM500	5000	950 *1150	1000 *1300	1500 *1700	1650 *2200	2000 *2400	2400 *2750	2650 *2800	3040	3045	3115	3145	2025	2045	1875	1920	*6-6	*3-6	6-6 *6-6

WIDE VIEW FULL FREE 3-STAGE MAST

Mast model	Max.lifting height (mm)	Load capacity (kg) (load center 500mm)							Mast overall height (mm)				Free lifting height (with backrest)				Mast tilting angle° (front/rear)		
		1.5t	1.8t	2t	2.5t	3t	3.5t	3.8t	1.5-1.8t	2-2.5t	3-3.5t	3.8t	1.5-1.8t	2-2.5t	3-3.5t	3.8t	1.5-1.8t	2-2.5t	3-3.8t
ZSM360	3600	1500	1800	2000	2500	3000	3200	/	1690	1695	1820	/	676	655	588	/	6/6	6-6 *6-6	6-6 *6-6
ZSM400	4000	1500	1800	2000	2500	3000	3200	/	1825	1830	1953	/	810	778	721	/	6/6	6-6 *6-6	6-6 *6-6
ZSM450	4500	1150 *1300	1450 *1600	1600 *1800	1700 *2200	2500 *2700	2800 *3000	2950 *3200	1990	1995	2120	2120	976	995	888	888	6-6 *6-6	6-6 *6-6	6-6 *6-6
ZSM480	4800	1100 *1200	1300 *1450	1250 *1700	1500 *2000	2250 *2450	2500 *2750	2700 *3000	2090	2095	2220	2220	1076	1055	988	988	6-6 *6-6	6-6 *6-6	6-6 *6-6
ZSM500	5000	1000 *1100	1200 *1350	1100 *1600	1300 *1800	2100 *2300	2300 *2600	2450 *2700	2155	2165	2287	2287	1145	1121	1055	1055	6-6 *6-6	6-6 *6-6	6-6 *6-6
ZSM550	5500	800 *1000	950 *1100	900 *1300	1100 *1600	1600 *2100	1700 *2300	1850 *2400	2380	2330	2453	2453	1360	1288	1221	1221	3-6 *3-6	3-6 *3-6	3-6 *3-6
ZSM600	6000	600 *800	700 *900	700 *1100	800 *1300	1200 *1900	1300 *2100	1400 *2200	2550	2550	2670	2670	1526	1505	1438	1438	3-6 *3-6	3-6 *3-6	3-6 *3-6
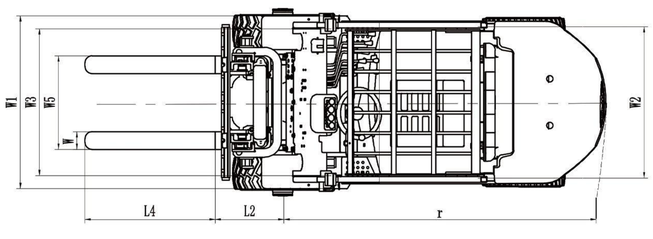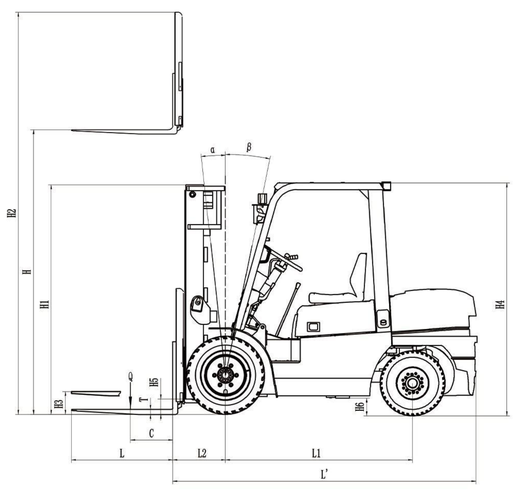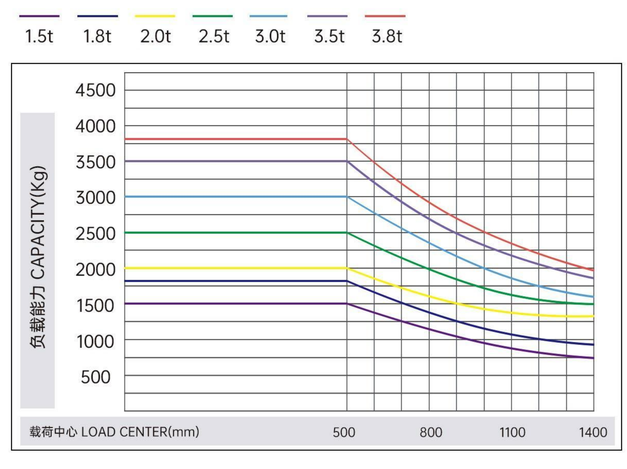
(1)Free lifting height (without backrest) 1.5-1.8T: +514mm,2-2.5T:+435mm,3-3.8T:+580mm;
(2)The service weight is the weight of forklift with dual tyres: +110 kg;
(3)*Refers to the load capacity of forklift with dual tyres;