1.5-4.5 T

K series Internal Combustion Counterbalance Forklift

◎配置 LED 节能灯具,亮度高,能耗低,寿命长。

Equipped with LED energy-saving lights, offering high brightness, low energy consumption and a long lifespan.

◎具有专利技术的新型方向盘双螺纹调整机构，提高了操作舒适性和调整可靠性。

The new patented dual-thread adjustment mechanism for the steering wheel enhances operational comfort and adjustment reliability.

◎起升系统标配缓冲功能，货物下降平稳，作业更加安全。

The lifting system comes standard with a buffering function, ensuring smooth cargo descent and safer operations.

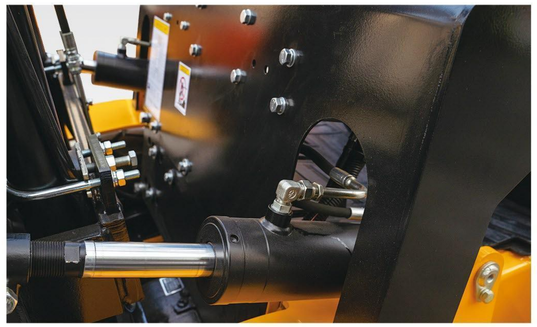

◎配备半包围座椅,司机驾驶更舒适。

The forklift is equipped with a semi-enclosed seat, providing greater comfort for the driver.

◎操纵手柄右置，换向、灯光手柄轿车化布置，小直径方向盘,操作方便,体验舒适。

The control lever is positioned on the right, with a vehicle layout for the directional and lighting handles. The small-diameter steering wheel ensures easy operation.

◎匹配铸造转向桥，承载更高，耐磨性好。大转向角度，确保整车极小的转弯半径。

The cast steering axle provides higher load capacity and excellent wear resistance. The large steering angle ensures an extremely small turning radius for the vehicle.

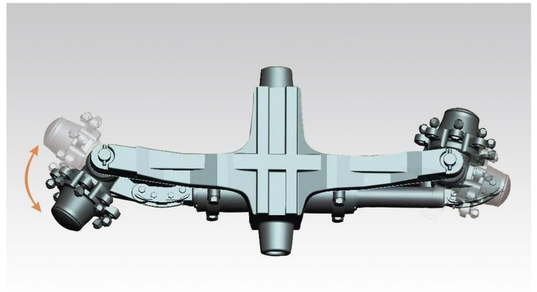

TECHNICAL DATAS

	General																		
1.01	Model			CPC15	CPCD15	CPC18	CPCD18	CPC20	CPCD20	CPC25	CPCD25	CPC30	CPCD30	CPC35	CPCD35	CPC38	CPCD38	CPCD40	CPCD45
1.02	Rated capacity	Q	Kg	1500		1800		2000		2500		3000		3500		3800		4000	4500
1.03	Load center distance	C	mm	500		500		500		500		500		500		500		500	500
1.04	Power type			Diesel		Diesel		Diesel		Diesel		Diesel		Diesel		Diesel		Diesel	Diesel
1.05	Driving type			Seated		Seated		Seated		Seated		Seated		Seated		Seated		Seated	Seated
1.06	Wheel base	L1	mm	1400		1400		1600		1600		1740		1740		1740		1900	1960
	Tyres																		
2.01	Tyre type			Pneumatic		Pneumatic		Pneumatic		Pneumatic		Pneumatic		Pneumatic		Pneumatic		Pneumatic	Pneumatic
2.02	Wheel number (front/rear)			2X / 2		2X / 2		2X / 2		2X / 2		2X / 2		2X / 2		2X / 2		2X / 2	2X / 2
2.03	Front tread	W3	mm	890		890		970		970		1000		1000		1000		1160	1000
2.04	Rear tread	W2	mm	920		920		970		970		970		970		970		1065	970
2.05	Tyre (front)			6.50-10-10PR		6.50-10-10PR		7.00-12-12PR		7.00-12-12PR		28X9-15-12PR		28X9-15-12PR		28X9-15-12PR		250-15-16PR	300-15-18PR
2.06	Tyre (rear)			5.00-8-10PR		5.00-8-10PR		6.00-9-10PR		6.00-9-10PR		6.50-10-10PR		6.50-10-10PR		6.50-10-10PR		6.50-10-10PR	700-12-10PR
	Size																		
3.01	Front overhang	L2	mm	420		420		459		459		469		469		469		500	495
3.02	Mast tilting angle, front/rear	α/β	°	6/12		6/12		6/12		6/12		6/12		6/12		6/12		6/12	6/12
3.03	Height with mast retraction	H1	mm	1990		1990		2000		2000		2065		2120		2120		2150	2175
3.04	Free lifting height	H3	mm	125		125		150		150		150		150		150		150	150
3.05	Max. lifting height	H	mm	3000		3000		3000		3000		3000		3000		3000		3000	3000
3.06	Max. height after lifting	H2	mm	4030		4030		4042		4042		4250		4250		4250		4260	4262
3.07	Overall guard height	H4	mm	2070		2070		2070		2070		2090		2090		2090		2100	2120
3.08	Fork size: length x width x thickness	L x W x T	mm	1070 x 100 x35		1070 x 100 x 40		1070x 100x 40		1070 x 120 x 40		1070 x 122 x 45		1070 x 122 x 50		1070 x 122 x 50		1220x150x50	1220x150x50
3.09	Overall length (fork excluded)	L'	mm	2230		2230		2540		2540		2700		2700		2740		2880	2975
3.10	Overall width	W1	mm	1080		1080		1160		1160		1225		1225		1225		1410	1380
3.11	Turning radius	r	mm	2060		2060		2330		2330		2420		2420		2450		2700	2680
3.12	Ground clearance of mast	H5	mm	105		105		110		110		120		120		120		130	135
3.13	Ground clearance of wheel base center (loaded)	H6	mm	115		115		135		135		143		143		143		155	155
3.14	Lateral fork adjustment Max./Min.	W5	mm	910/200		910/200		1024/200		1024/240		1060/250		1060/250		1060/250		1290/300	1060/300
	Performance																		
4.01	Travelling speed (loaded/unloaded)		km/h	13.5/14.5		13.5/14.5		17/19		17/19		18/19.5		18/19.5		17/19.5		18/19	18/19
4.02	Lifting speed (loaded/unloaded)		mm/s	460/500		450/500		530/550		530/550		470/520		370/400		350/370		350/380	440/480
4.03	Lowering speed (loaded/unloaded)		mm/s	450/550		450/550		450/550		450/550		450/550		350/400		330/400		350/400	450/500
4.04	Gradeability (loaded/unloaded)		%	20/20	23/20	20/20	21/20	25/20	27/25	22/18	23/18	20/17	22/18	18/15	20/16	18/15	20/16	15/18	20/20
4.05	Max. traction force (loaded/unloaded)		KN	21/15.2	21/15.2	20/16	20/16	17/13	19/14	17/14	19/15	18/14	18/14	19/14	19/14	19/14	19/14	20/18	20/16
	Weight																		
5.01	Total weight		Kg	2680		2820		3380		3610		4125		4400		4640		5270	5500
5.02	Axle load (unloaded), front/rear		Kg	1170/1510		1120/1700		1380/2000		1410/2200		1665/2460		1780/2620		1820/2820		2110/3160	2110/3160
5.03	Axle load (loaded), front/rear		Kg	3640/540		4060/560		4810/570		5520/590		6515/610		7180/720		7640/800		8370/900	8370/900
	Combustion engine																		
6.01	Engine manufacturer /Model			XINCHAI NC485BPG				XINCHAI C490BPG						XINCHAI A495BPG				XINCHAI A498BPG	
6.02	Rated power /Speed		Kw/rpm	30/2600				40/2650						42/2500				45/2500	
6.03	Max. torque /Speed		Nm/rpm	131/1700-1900				160/1800 ~ 2000						174/1800 ~ 2000				193/1800 ~ 2000	
6.04	Cylinder number -bore×stroke			4-85x105				4-90×105						4-95×105				4-98×105	
6.05	Engine displacement		L	2.27				2.67						2.977				3.168	
6.06	Emission			Stage II				Stage II						Stage II				Stage II	
	Transmission																		
7.01	Transmission gears (front/rear)			1-1 Power Shift 2-2 Manual Shift				1-1 Power Shift 2-2 Manual Shift						1-1 Power Shift 2-2 Manual Shift				1-1 Power Shift 2-2 Manual Shift	
7.02	Fuel tank capacity		L	45				60						60				70	60
	Additional data																		
8.01	Service brake / parking brake			Hydraulic/Mechanical				Hydraulic/Mechanical						Hydraulic/Mechanical				Hydraulic/Mechanical	
8.02	Hydraulic system working pressure		Mpa	14.5				17.5						17.5				17.5	17.5

WIDE VIEW MAST

Mast model	Max.lifting height (mm)	Load capacity (kg) (load center 500mm)									Mast overall height (mm)							Mast tilting angle° (front/rear)				
		1.5t	1.8t	2t	2.5t	3t	3.5t	3.8t	4t	4.5t	1.5-1.8t	2-2.5t	3t	3.5t	3.8t	4t	4.5t	1.5-1.8t	2-2.5t	3-3.8t	4t	4.5t
M300	3000	1500	1800	2000	2500	3000	3500	3800	4000	5000	1990	1995	2065	2120	2120	2150	2185	6/12	6/12	6/12	6/12	6/12
M330	3300	1500	1800	2000	2500	3000	3500	3800	4000	5000	2140	2145	2215	2270	2270	2300	2335	6/12	6/12	6/12	6/12	6/12
M350	3500	1500	1800	2000	2500	3000	3500	3800	4000	5000	2240	2245	2315	2370	2370	2400	2435	6/12	6/12	6/12	6/12	6/12
M370	3700	1500	1800	2000	2500	3000	3500	3800	4000	5000	2340	2345	2415	2470	2470	2500	2535	6-6 *6-12	6-6 *6-6	6-6 *6-12	6-6 *6-6	6/12
M400	4000	1500	1800	2000	2500	3000	3300 *3500	3500 *3800	3700 *4000	5000	2540	2545	2615	2670	2670	2700	2685	6-6 *6-12	6-6 *6-6	6-6 *6-12	6-6 *6-6	6/12
M450	4500	1200 *1400	1500 *1700	1600 *1900	2100 *2400	2600 *3000	2900 *3100	3100 *3300	3100 *3500	4600	2790	2795	2865	2920	2920	2950	2985	6-6 *6-6	6-6 *6-6	6-6 *6-12	6-6 *6-6	6/6
M500	5000	900 *1150	1000 *1300	1200 *1700	1600 *1900	2100 *2850	2400 *2750	2650 *2800	2600 *3200	4000	3040	3045	3115	3170	3170	3200	3235	6-6 *6-6	6-6 *6-6	6-6 *6-6	6-6 *6-6	6/6
M550	5500	*1000	*1100	950 *1500	1200 *1700	1650 *2400	1800 *2500	1900 *2600	2100 *2600	3200	3340	3345	3415	3470	3470	3500	3535	*3-6	*3-6	*3-6	*3-6	6/6
M600	6000	*750	*900	700 *1200	900 *1400	1200 *2100	1400 *2300	1500 *2400	1600 *2400	2400	3590	3595	3665	3720	3720	3750	3758	*3-6	*3-6	*3-6	*3-6	6/6

WIDE VIEW FULL FREE 2-STAGE MAST

Mast model	Max.lifting height (mm)	Load capacity (kg) (load center 500mm)									Mast overall height (mm)						Free lifting height (with backrest)						Mast tilting angle° (front/rear)				
		1.5t	1.8t	2t	2.5t	3t	3.5t	3.8t	4t	4.5t	1.5-1.8t	2-2.5t	3t	3.5-3.8t	4t	4.5t	1.5-1.8t	2-2.5t	3t	3.5-3.8t	4t	4.5t	1.5-1.8t	2-2.5t	3-3.8t	4t	4.5t
ZM300	3000	1500	1800	2000	2500	3000	3500	3800	4000	5000	1990	1995	2065	2095	2150	2185	975	995	825	870	913	810	6/12	6/12	6/12	6/12	6/12
ZM350	3500	1500	1800	2000	2500	3000	3500	3800	4000	5000	2240	2245	2315	2345	2400	2435	1225	1245	1075	1120	1163	1060	6/12	6-6 *6-12	6/12	6-6 *6-12	6/12
ZM400	4000	1500	1800	2000	2500	2700 *3000	3300 *3500	3500 *3800	3700 *4000	5000	2540	2545	2615	2645	2700	2685	1525	1545	1375	1420	1413	1310	6-6 *6-12	6-6 *6-12	6-6 *6-12	6-6 *6-12	6/12
ZM450	4500	1100 *1300	1450 *1600	1800 *1900	2150 *2400	2400 *2700	2900 *3100	3100 *3300	3100 *3500	/	2790	2795	2865	2895	2950	/	1775	1795	1625	1670	1663	/	6-6 *6-6	6-6 *6-6	6-6 *6-12	6-6 *6-6	/
ZM500	5000	950 *1150	1000 *1300	1500 *1700	1650 *2200	2000 *2400	2400 *2750	2650 *2800	2600 *3200	/	3040	3045	3115	3145	3200	/	2025	2045	1875	1920	1913	/	*6-6	*3-6	6-6 *6-6	*3-6	/

WIDE VIEW FULL FREE 3-STAGE MAST

Mast model	Max.lifting height (mm)	Load capacity (kg) (load center 500mm)									Mast overall height (mm)						Free lifting height (with backrest)						Mast tilting angle° (front/rear)				
		1.5t	1.8t	2t	2.5t	3t	3.5t	3.8t	4t	4.5t	1.5-1.8t	2-2.5t	3-3.5t	3.8t	4t	4.5t	1.5-1.8t	2-2.5t	3-3.5t	3.8t	4t	4.5t	1.5-1.8t	2-2.5t	3-3.8t	4t	4.5t
ZSM360	3600	1500	1800	2000	2500	3000	3200	/	4000	5000	1690	1695	1820	/	1860	1885	676	655	588	/	623	610	6/6	6-6 *6-6	6-6 *6-6	6-6 *6-6	6/12
ZSM400	4000	1500	1800	2000	2500	3000	3200	/	4000	5000	1825	1830	1953	/	1993	2010	810	778	721	/	756	735	6/6	6-6 *6-6	6-6 *6-6	6-6 *6-6	6/12
ZSM450	4500	1150 *1300	1450 *1600	1600 *1800	1700 *2200	2500 *2700	2800 *3000	2950 *3200	3000 *3500	4600	1990	1995	2120	2120	2160	2185	976	995	888	888	923	910	6-6 *6-6	6-6 *6-6	6-6 *6-6	6-6 *6-6	6/6
ZSM480	4800	1100 *1200	1300 *1450	1250 *1700	1500 *2000	2250 *2450	2500 *2750	2700 *3000	2700 *3200	4250	2090	2095	2220	2220	2260	2285	1076	1055	988	988	1023	1010	6-6 *6-6	6-6 *6-6	6-6 *6-6	6-6 *6-6	6/6
ZSM500	5000	1000 *1100	1200 *1350	1100 *1600	1300 *1800	2100 *2300	2300 *2600	2450 *2700	2500 *3000	4000	2155	2165	2287	2287	2327	2385	1145	1121	1055	1055	1090	1110	6-6 *6-6	6-6 *6-6	6-6 *6-6	6-6 *6-6	6/6
ZSM550	5500	800 *1000	950 *1100	900 *1300	1100 *1600	1600 *2100	1700 *2300	1850 *2400	2000 *2500	3200	2380	2330	2453	2453	2493	2535	1360	1288	1221	1221	1256	1260	3-6 *3-6	3-6 *3-6	3-6 *3-6	3-6 *3-6	6/6
ZSM600	6000	600 *800	700 *900	700 *1100	800 *1300	1200 *1900	1300 *2100	1400 *2200	1500 *2300	2400	2550	2550	2670	2670	2710	2735	1526	1505	1438	1438	1473	1460	3-6 *3-6	3-6 *3-6	3-6 *3-6	3-6 *3-6	6/6

(1)Free lifting height (without backrest) 1.5-1.8T: +514mm,2-2.5T:+435mm,3-3.8T:+580mm,4T:+535mm,4.5T:+600mm;
(2)The service weight is the weight of forklift with dual tyres: +110 kg;
(3)*Refers to the load capacity of forklift with dual tyres;

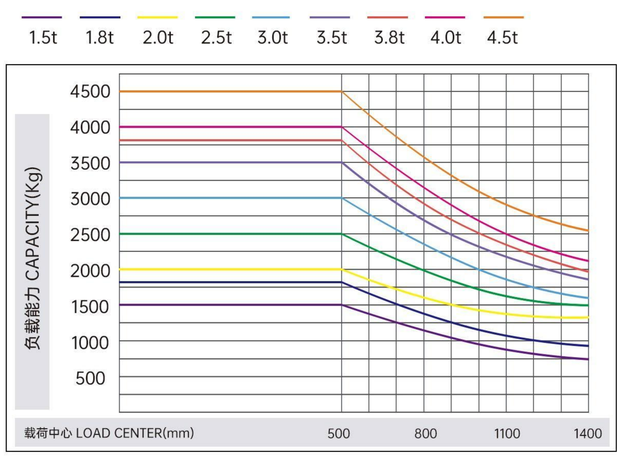

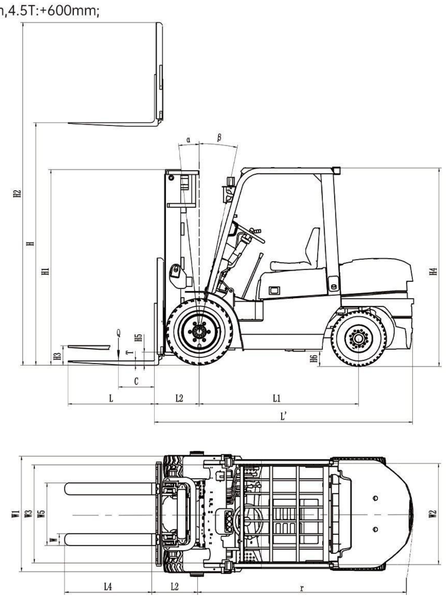

K Series 1.5-4.5T Diesel Forklift Engines

Engine Model	Rated power/speed (kw/rpm)	Rated torque/speed (Nm/rpm)	Engine Displacement	Cylinder number Bore x Stroke	Emission Standard	Applicable to (tonnage)
XINCHAI N485BPG	30/2600	131/1820 ~ 2000	2.27	4-85×105	Stage II	1.5-1.8T
XINCHAI C490BPG	40/2650	160/1800 ~ 2000	2.67	4-90×105	Stage II	2-3.5T
XINCHAI A495BPG	42/2500	174/1800-2000	2.977	4-95×105	Stage II	2-3.8T
XINCHAI A498BPG	45/2500	193/1800 ~ 2000	3.168	4-98×105	Stage II	2-4T
ISUZU C240PKJ-30	35.4/2500	137.7/1800	2.369	4-86×102	Stage IIIA	1.5-3.5T
MITSUBISHI S4S-DPEU2	35.3/2250	177/1700	3.331	4-94×120	Stage IIIA	2-3.5T
ISUZU 4JG2PE-01	46/2450	186/1700±100	3.059	4-95.4×107	Stage II	2-4T
CUMMINS QSF2.8t3NA49	36.5/2500	186/1100-1700	2.8	4-94×100	Stage IIIA	2-3.5T
CUMMINS QSF2.8t3NA60	43/2500	186/1100-1500	2.8	4-94×100	Stage IIIA	2-4T
KOHLER 1903TCR	42/2600	225/1500	1.861	3-88×102	Stage IIIB/EPAT4F	3-3.8T
XINCHAI 3E22YG51	44.8/2400	210/1600-1800	2.23	3-94×107	Euro V	2-4T
KUBOTA V2607-CR-EW03	37.4/2400	174.1/1500	2.615	4-87×110	Euro V/EPAT4F	2-3.8T